ER1045

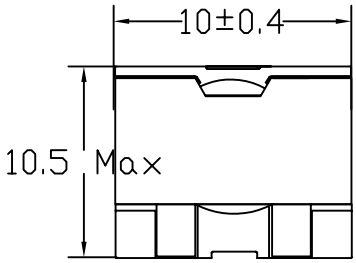

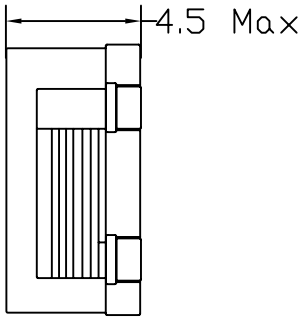

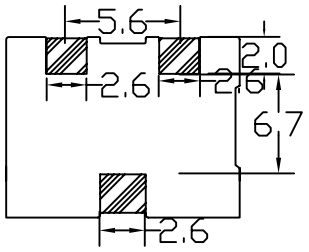

Recommended patterns

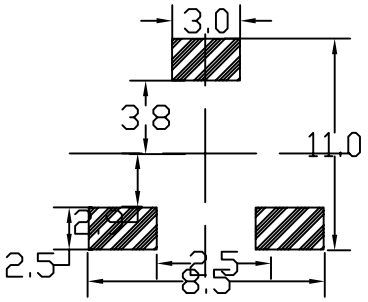

Part NO.	Test Condition	Inductance L(uH)±20%	(mOHM)DC Restistance		Heat Rated Current (A)Max	Saturation Current (A)Max
			Typical	Max		
GCI R1045-0.22	100KHZ /1.0V	0.22	1.8	2.2	18.0	39.6
GCI R1045-0.45	100KHZ /1.0V	0.45	3.1	3.7	13.4	27.6
GCI R1045-0.8	100KHZ /1.0V	0.8	4.9	5.9	10.2	20.8
GCI R1045-1.3	100KHZ /1.0V	1.3	9.8	11.8	7.3	16.6
GCI R1045-1.8	100KHZ /1.0V	1.8	15.5	18.6	6.0	13.3
GCI R1045-2.5	100KHZ /1.0V	2.5	18.2	21.8	5.0	11.8

ER25

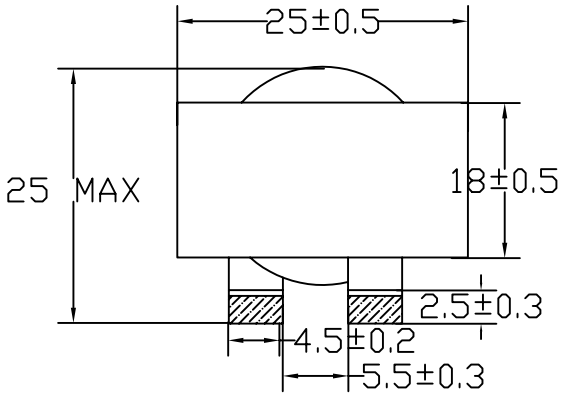

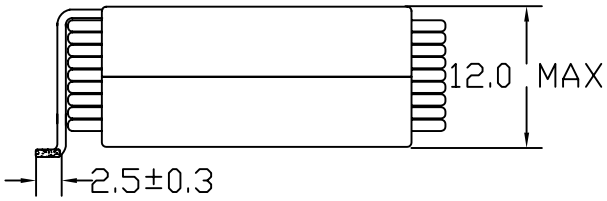

Recommended patterns

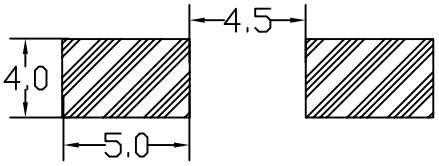

Part NO.	Test Condition	Inductance L(uH)±20%	(mΩHM)DC Restistance		Heat Rated Current (A)Max	Saturation Current (A)Max
			Typical	Max		
GCI R 2512-3.3	100KHZ /1.0V	3.30	4.00	5.00	19.0	49.0
GCI R 2512-4.7	100KHZ /1.0V	4.70	4.00	5.00	19.0	43.0
GCI R 2512-6.8	100KHZ /1.0V	6.80	4.70	6.00	16.0	29.0
GCI R 2512-8.2	100KHZ /1.0V	8.20	4.70	6.00	16.0	23.0
GCI R 2512-10.0	100KHZ /1.0V	10.00	4.70	6.00	16.0	20.0
GCI R 2512-15.0	100KHZ /1.0V	15.00	4.70	6.00	16.0	13.0
GCI R 2512-22.0	100KHZ /1.0V	22.00	23.00	30.00	13.0	15.0
GCI R 2512-33.0	100KHZ /1.0V	33.00	23.00	30.00	13.0	10.5
GCI R 2512-47.0	100KHZ /1.0V	47.00	23.00	30.00	13.0	7.8
GCI R 2512-56.0	100KHZ /1.0V	56.00	23.00	30.00	13.0	6.0

ER1250

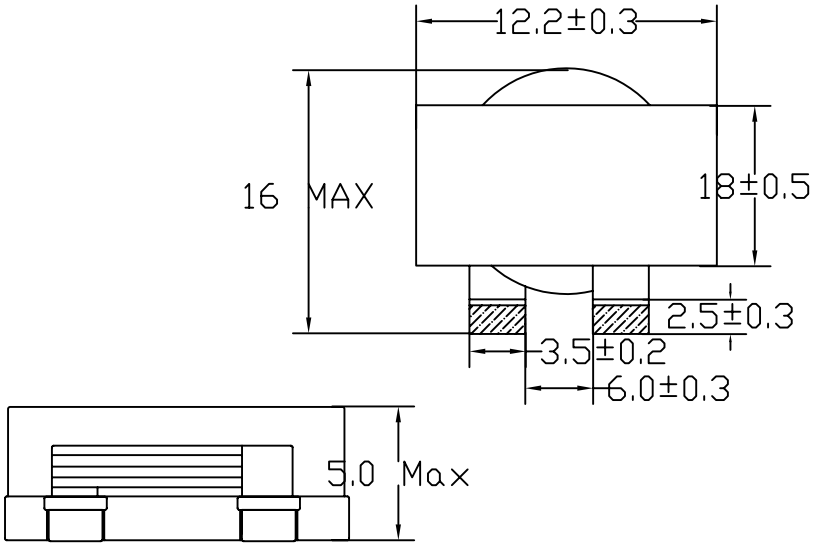

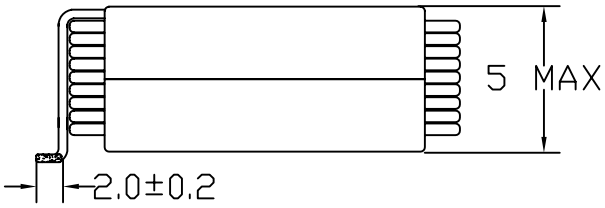

Recommended patterns

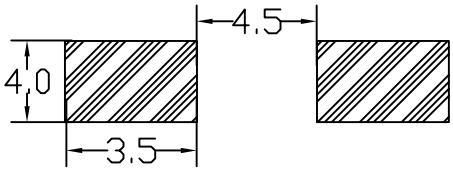

Part NO.	Test Condition	Inductance L(uH)±20%	(mOHM)DC Restistance		Heat Rated Current (A)Max	Saturation Current (A)Max
			Typical	Max		
GCI ER12-0.3	100KHZ /1.0V	0.3	1.6	1.9	18.5	35
GCI ER12-0.6	100KHZ /1.0V	0.6	2.1	2.5	17.0	29.6
GCI ER12-1.2	100KHZ /1.0V	1.2	3.1	3.7	15.0	21.0
GCI ER12-1.8	100KHZ /1.0V	1.8	5.5	6.6	10.5	17.6
GCI ER12-2.7	100KHZ /1.0V	2.7	9.0	10.8	8.0	14.7
GCI ER12-3.6	100KHZ /1.0V	3.6	10.0	12.0	7.5	12.5
GCI ER12-4.8	100KHZ /1.0V	4.8	13.6	16.3	7.0	11.0

PQ20

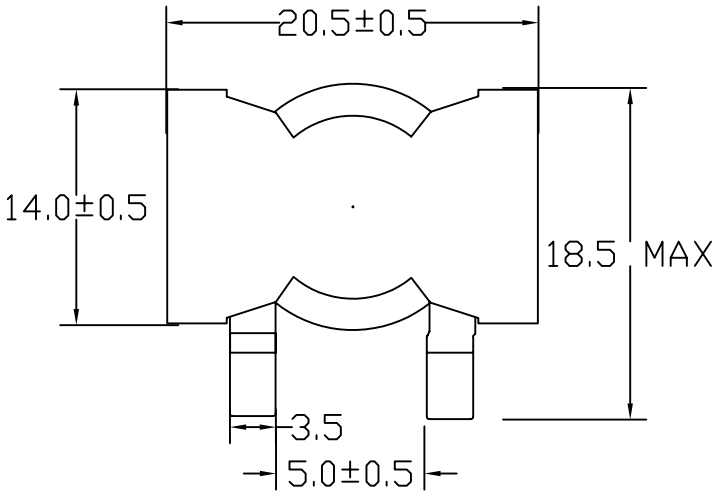

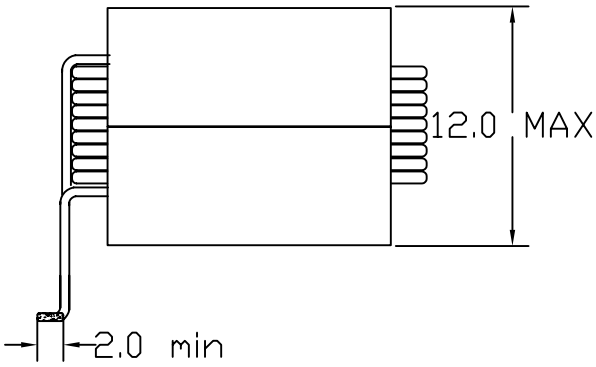

Recommended patterns

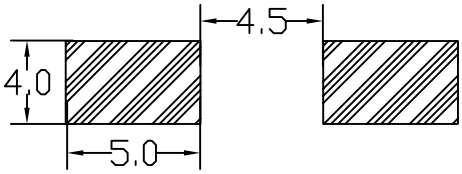

Part NO.	Test Condition	Inductance L(uH)±20%	(mOHM)DC Restistance		Heat Rated Current (A)Max	Saturation Current (A)Max
			Typical	Max		
GCI P2012-3.0	100KHZ /1.0V	3.30	4.60	6.00	20.0	49.0
GCI P2012-4.7	100KHZ /1.0V	4.70	4.60	6.00	20.0	35.0
GCI P2012-6.8	100KHZ /1.0V	6.80	4.60	6.00	20.0	26.0
GCI P2012-8.2	100KHZ /1.0V	8.20	4.60	6.00	20.0	23.0
GCI P2012-10.0	100KHZ /1.0V	10.00	6.80	10.00	16.0	20.0
GCI P2012-15.0	100KHZ /1.0V	15.00	6.80	10.00	16.0	18.0
GCI P2012-22.00	100KHZ /1.0V	22.00	6.80	10.00	16.0	11.0
GCI P2012-33.00	100KHZ /1.0V	33.00	6.80	10.00	16.0	7.0

PQ26

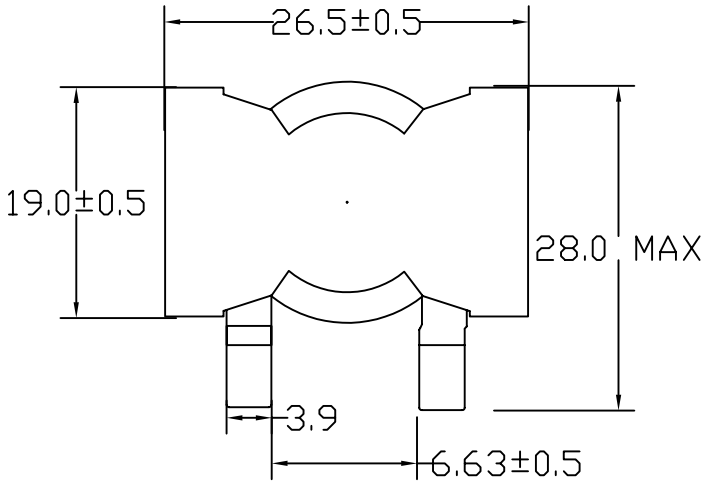

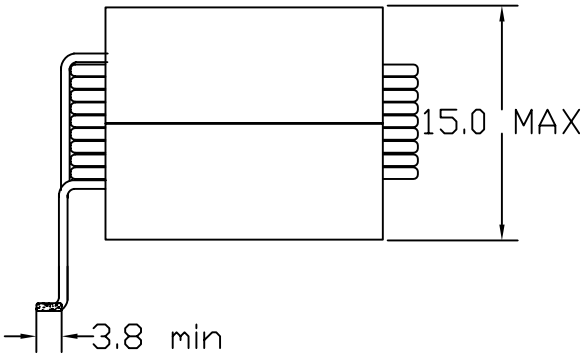

Recommended patterns

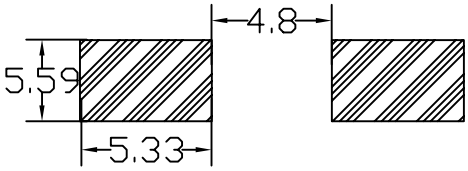

Part NO.	Test Condition	Inductance L(uH)±20%	(mOHM)DC Restistance		Heat Rated Current (A)Max	Saturation Current (A)Max
			Typical	Max		
GCI P2618-3.3	100KHZ /1.0V	3.3	2.6	2.9	28.0	92.0
GCI P2618-4.7	100KHZ /1.0V	4.7	2.6	2.9	28.0	61.0
GCI P2618-6.8	100KHZ /1.0V	6.8	2.6	2.9	28.0	45.3
GCI P2618-10.0	100KHZ /1.0V	10.0	2.6	2.9	28.0	31.0
GCI P2618-15.0	100KHZ /1.0V	15.0	2.6	2.9	28.0	21.2
GCI P2618-22.0	100KHZ /1.0V	22.0	2.6	2.9	28.0	14.0
GCI P2618-33.0	100KHZ /1.0V	33.0	2.6	2.9	28.0	8.7

RM6

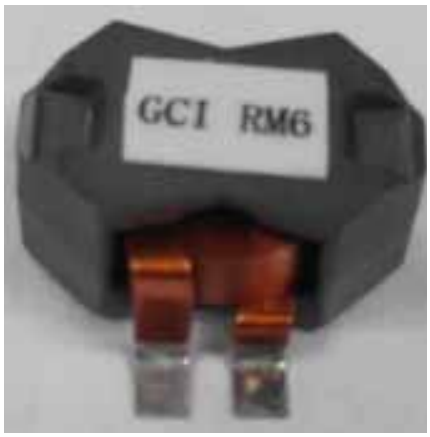

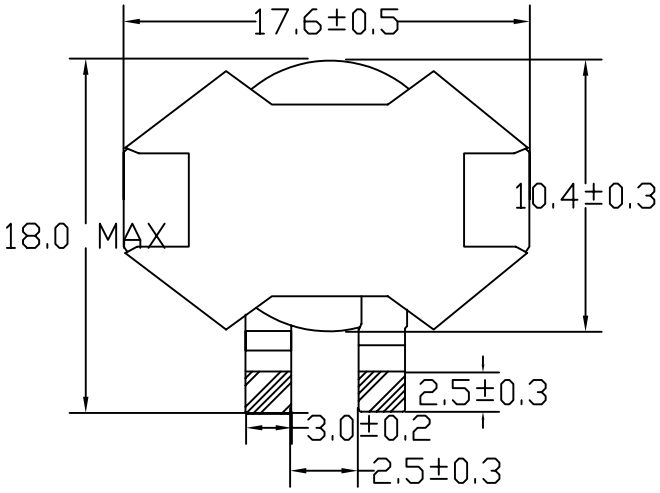

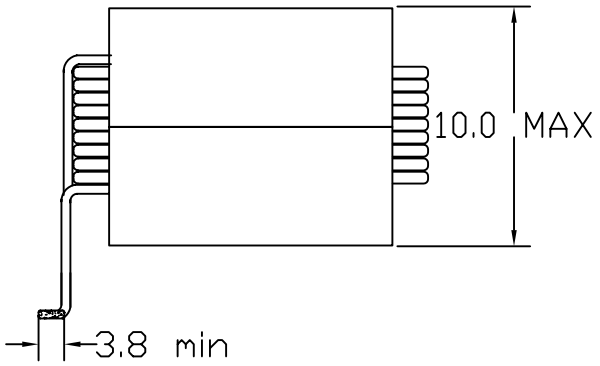

Recommended patterns

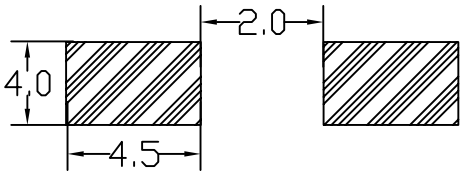

Part NO.	Test Condition	Inductance L(uH)±20%	(mOHM)DC Restistance		Heat Rated Current (A)Max	Saturation Current (A)Max
			Typical	Max		
GCI RM6-2.2	100KHZ /1.0V	2.2	1.5	1.7	28.0	52.0
GCI RM6-3.3	100KHZ /1.0V	3.3	2.0	2.3	26.0	45.0
GCI RM6-4.7	100KHZ /1.0V	4.7	3.0	3.4	24.0	38.0
GCI RM6-5.6	100KHZ /1.0V	5.6	4.0	4.5	22.0	33.0
GCI RM6-6.8	100KHZ /1.0V	6.8	5.6	6.2	21.0	30.0
GCI RM6-8.2	100KHZ /1.0V	8.2	7.5	8.0	17.0	25.0
GCI RM6-10.0	100KHZ /1.0V	10.0	8.0	8.9	16.0	23.0
GCI RM6-15.0	100KHZ /1.0V	15.0	8.7	1.0	14.0	21.0

RM10

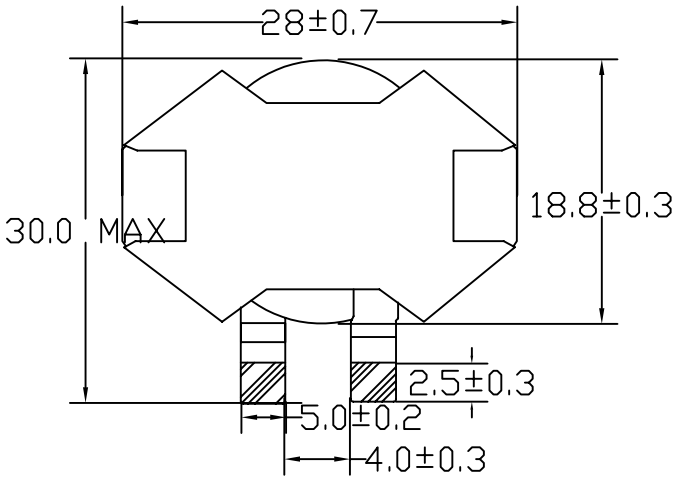

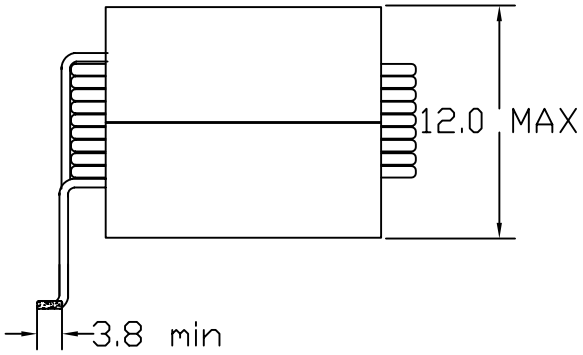

Recommended patterns

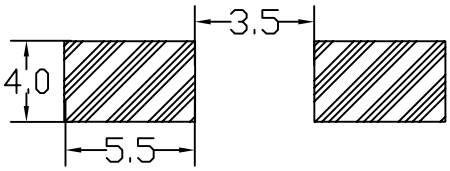

Part NO.	Test Condition	Inductance L(uH)±20%	(mOHM)DC Restistance		Heat Rated Current (A)Max	Saturation Current (A)Max
			Typical	Max		
GCI RM10-3.3	100KHZ /1.0V	3.3	2.6	2.9	28.0	92.0
GCI RM10-4.7	100KHZ /1.0V	4.7	2.6	2.9	28.0	61.0
GCI RM10-6.8	100KHZ /1.0V	6.8	2.6	2.9	28.0	45.3
GCI RM10-10.0	100KHZ /1.0V	10.0	2.6	2.9	28.0	31.0
GCI RM10-15.0	100KHZ /1.0V	15.0	2.6	2.9	28.0	21.2
GCI RM10-22.0	100KHZ /1.0V	22.0	2.6	2.9	28.0	14.0
GCI RM10-33.0	100KHZ /1.0V	33.0	2.6	2.9	28.0	8.7